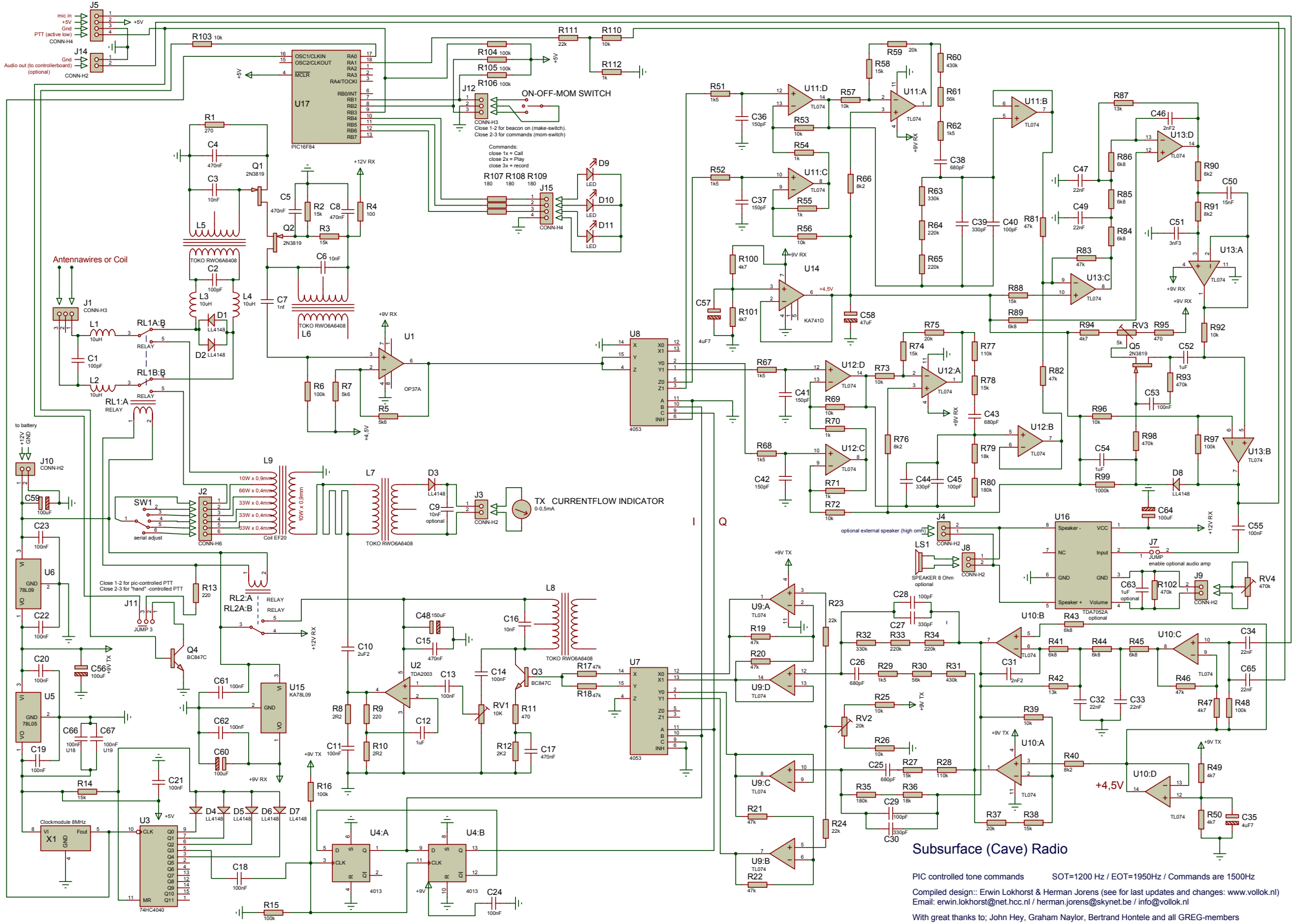
Subsurface (Cave) Radio
PIC controlled tone commands
SOT=1200 Hz / EOT=1950Hz / Commands are 1500Hz
Compiled design:: Erwin Lokhorst & Herman Jorens (see for last updates and changes: www.vollok.nl)
Email: erwin.lokhorst@net.hcc.nl / herman.jorens@skynet.be / info@vollok.nl
With great thanks to; John Hey, Graham Naylor, Bertrand Hontele and all GREG-members
Antennawires or Coil
ON-OFF-MOM SWITCH
Commands:
close 1x = Call
close 2x = Play
close 3x = record
TX CURRENTFLOW INDICATOR
0-0,5mA
+4,5V
I
Q